Revision Problems: TDM

Problem 3-60:

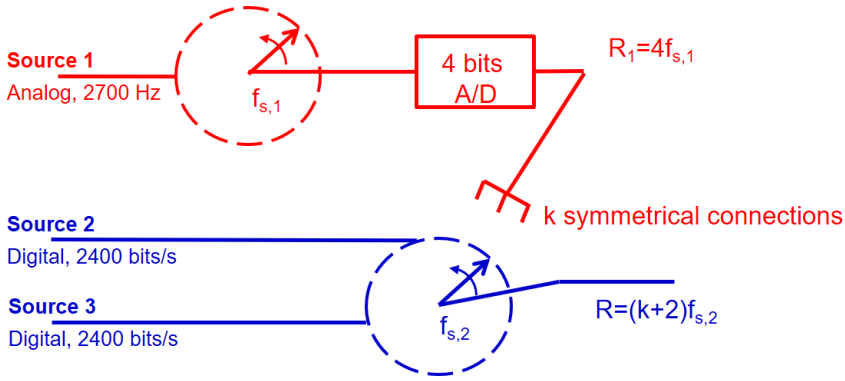

- The sampling rate of the analog source is given:

$$f_{s,1} = 1.11111 \times f_{Nyq} = 1.11111 \times (2B) = 1.11111 \times 2 \times 2.7 = 6 \text{ ksamples/sec}$$

- Therefore, the data rate of the PCM signal corresponding to this source is given by:

$$R_1 = n f_{s,1} = 4 \times 6 = 24 \text{ kbits/sec}$$

- It can be observed that R_1 is divisible by 2.4 kbits/sec. Therefore:
  - A second commutator rotating at $f_{s,2} = 2.4$ kHz can be used.
  - 1 connection is required for each one of the 2 digital sources resulting in a total of 2 connections.
  - $k = \frac{R_1}{2.4} = 10$ connections are required to the digitized analog source having a data rate of $R_1 = 24$ kbits/sec.

- Consequently, the bit rate of the output TDM signal is given by:

$$R = (k+2) \times f_{s,2} = 12 \times 2.4 = 28.8 \text{ kbits/sec}$$

Problem 3-59:
Method 1 (from assignment solution)

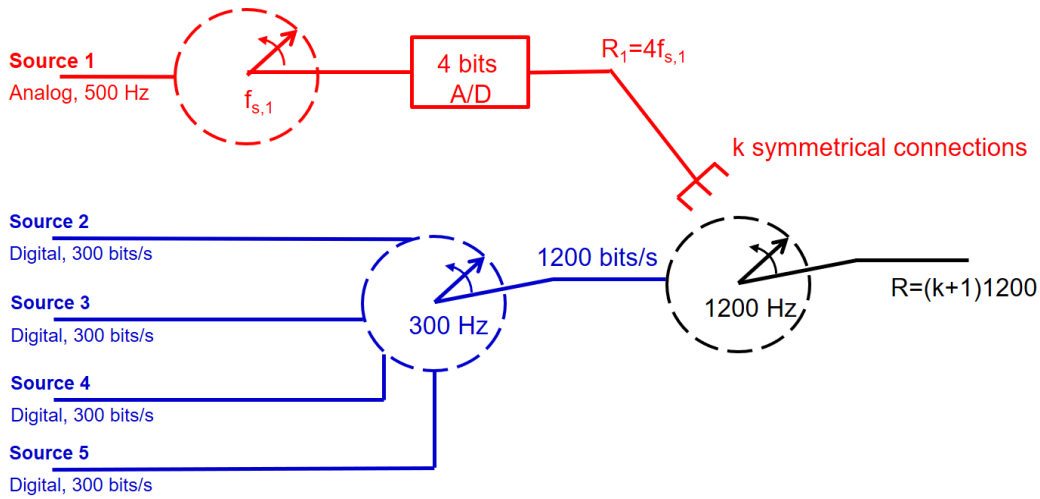

- Solving for $f_{s,1}$ and k: The following two relations must be satisfied:

$$\left.\begin{array}{l} R_1 = 4f_{s,1} = 1200k \Rightarrow f_{s,1} = 300k \\ f_{s,1} \geq 2 \times 500 = 1000 \end{array}\right\} \Rightarrow 300k \geq 1000 \quad \Rightarrow \quad k \geq 3.33$$

$$\Rightarrow \quad k = 4 \quad \text{and} \quad f_{s,1} = 1200 \text{ Hz}$$

- Therefore: $R = (k+1) \times 1200 = 5 \times 1200 = 6000$ bits/s.

Method 2 (No pulse-stuffing)

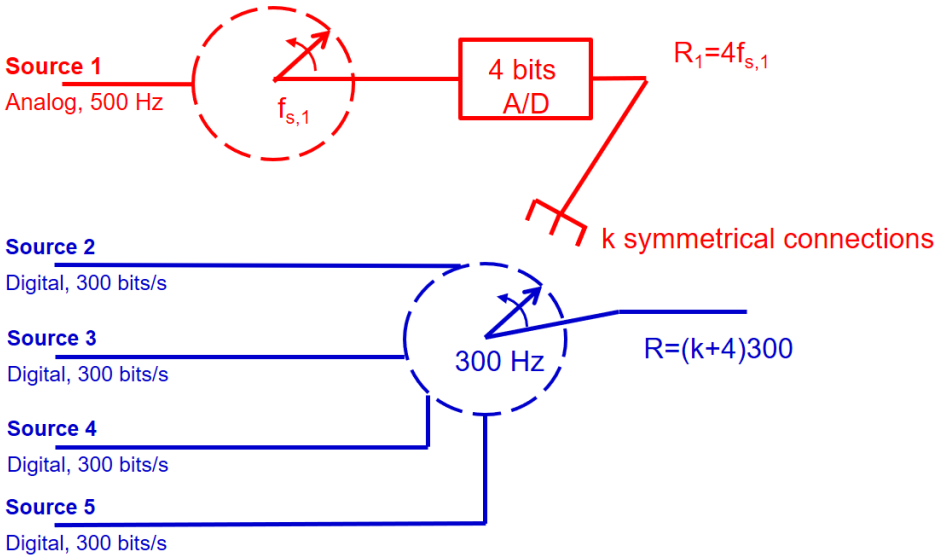

- Solving for $f_{s,1}$ and k: The following two relations must be satisfied:

$$\left.\begin{array}{l} R_1 = 4f_{s,1} = 300k \Rightarrow f_{s,1} = 75k \\ f_{s,1} \geq 2 \times 500 = 1000 \end{array}\right\} \Rightarrow 75k \geq 1000 \quad \Rightarrow \quad k \geq 13.33$$

$$\Rightarrow \quad k = 14 \quad \text{and} \quad f_{s,1} = 1050 \text{ Hz}$$

- Therefore: $R = (k+4) \times 300 = 18 \times 300 = 5400$ bits/s.

Method 3 (With pulse-stuffing)

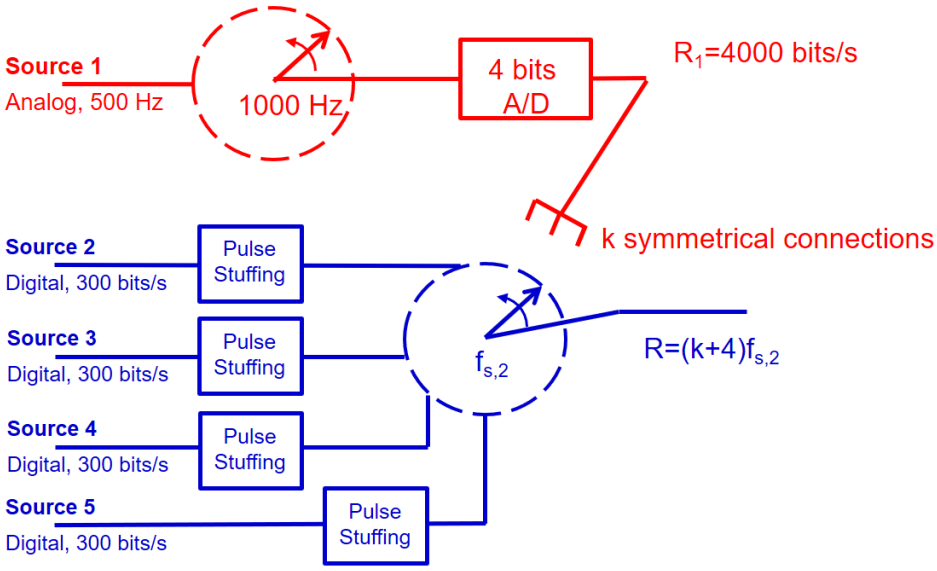

- Solving for $f_{s,2}$ and k: The following two relations must be satisfied:

$$\left.\begin{array}{l} R_1 = 4000 = kf_{s,2} \Rightarrow f_{s,2} = \frac{4000}{k} \\ f_{s,2} \geq 300 \end{array}\right\} \Rightarrow \frac{4000}{k} \geq 300 \quad \Rightarrow \quad k \leq 13.33$$

$$\Rightarrow \quad k = 13 \quad \text{and} \quad f_{s,2} = 307.7 \text{ Hz}$$

- Therefore: $R = (k+4) \times f_{s,2} = 17 \times 307.7 = 5231$ bits/s.

Given that the third method yields the smallest output rate, then this solution is the best solution.

Problem 6, Exam 2, Fall 2018:

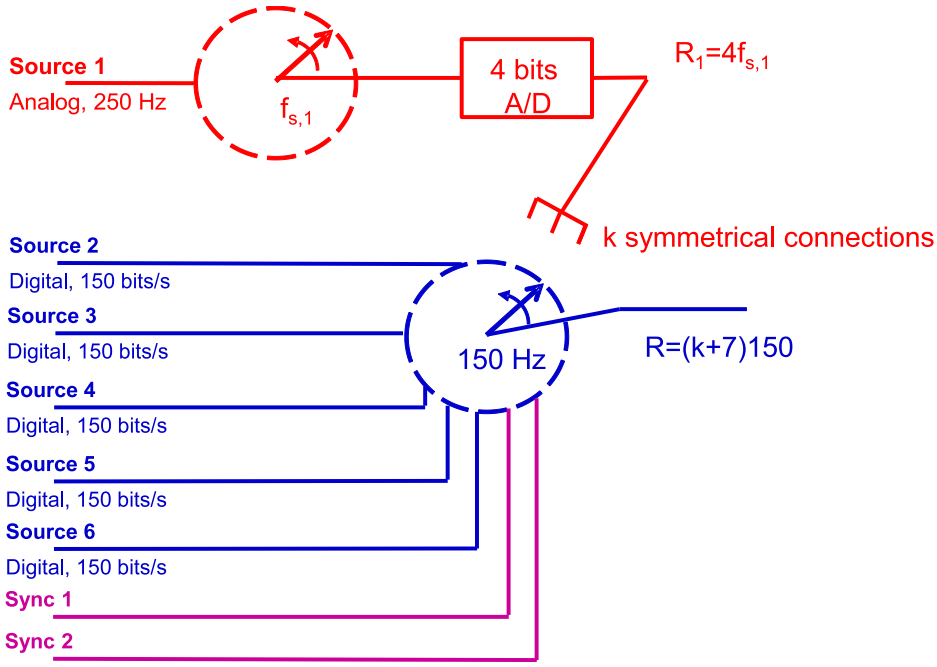

- Solving for $f_{s,1}$ and k: The following two relations must be satisfied:

$$\left.\begin{array}{l} R_1 = 4f_{s,1} = 150k \Rightarrow f_{s,1} = 37.5k \\ f_{s,1} \geq 2 \times 250 = 500 \end{array}\right\} \Rightarrow 37.5k \geq 500 \quad \Rightarrow \quad k \geq 13.33$$

$$\Rightarrow \quad k = 14 \quad \text{and} \quad f_{s,1} = 525 \text{ Hz}$$

- Therefore: $R = (k+7) \times 150 = 21 \times 150 = 3150$ bits/s.

Problem 3.54:

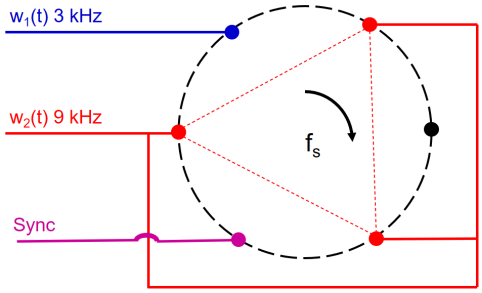

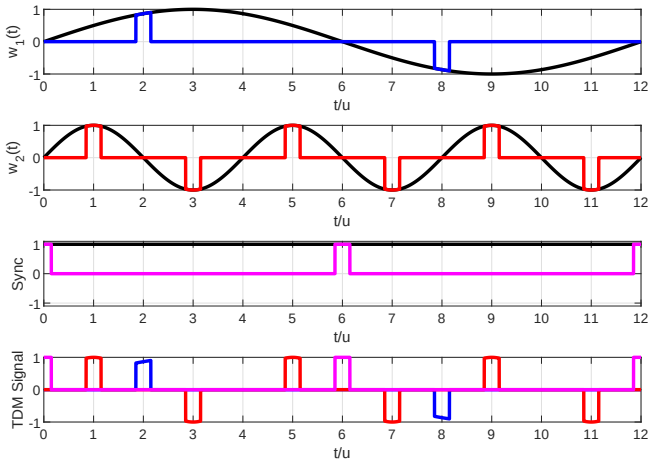

- $w_1(t)$ needs to be sampled at 6 kHz and $w_2(t)$ needs to be sampled at 18 kHz. Therefore, a commutator rotating at $f_s = 6$ kHz can be used. The signal $w_1(t)$ can be connected once to the commutator while the signal $w_2(t)$ can be connected three times to the commutator
- The time to complete one rotation of the commutator is $T_s = \frac{1}{f_s} = \frac{1}{6}$ ms.
- The time to move between two consecutive connections on the commutator is $u = \frac{T_s}{6} = \frac{1}{36}$ ms (this will be considered as the time unit).
  - The period (in ms) of $w_1(t)$ is $T_1 = \frac{1}{3} = \frac{12}{36} = 12u$.
  - The period (in ms) of $w_2(t)$ is $T_2 = \frac{1}{9} = \frac{4}{36} = 4u$.